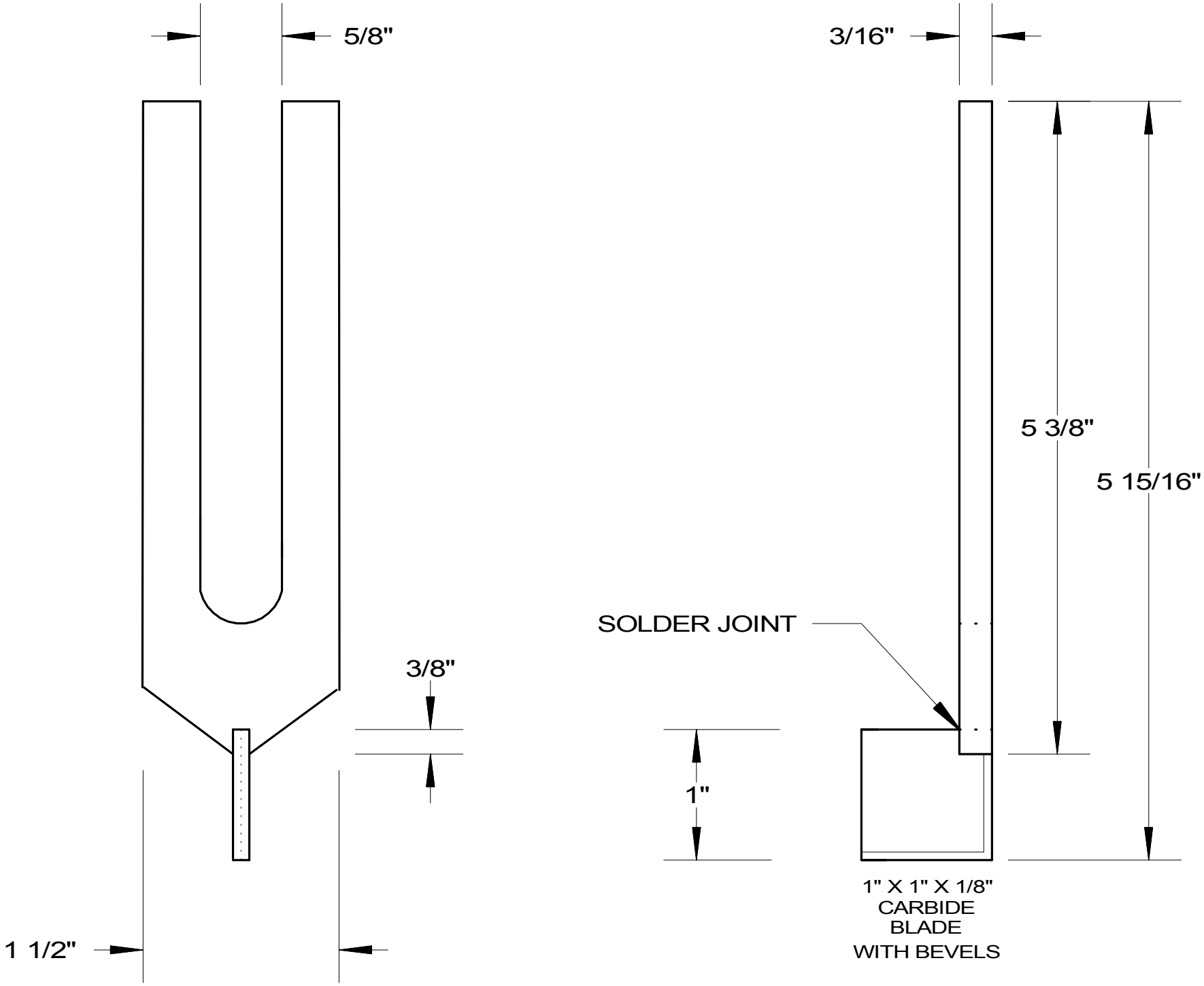
5/8"
3/16"
5 3/8"
5 15/16"
SOLDER JOINT
3/8"
1"
1 1/2"
1" X 1" X 1/8"
CARBIDE
BLADE
WITH BEVELS